The Broche Flamberge “Centenaire”

Dear Customer,

Thank you for choosing a La Cornue product. We hope that you will derive tremendous enjoyment from cooking delicious meals with it.

The aim of this document is to make you familiar with the potential provided by a professional quality product designed for individuals, and to facilitate its maintenance.

Above all, a La Cornue product is manufactured using noble and pure materials. The choices made for some components, such as brass for the burners and cast-iron for the gas simmering plate, are the result of criteria of technicality and professional performance, which are not attainable with other materials or protective treatments. We are very much attached to the authenticity of our products and we are convinced that you will appreciate them even more as you use them.

In order to make sure that you will be satisfied with your product for a long time, we recommend that you follow the advice given in the “User 's Instructions” section of this document.

Thank you for choosing us,

Kind regards,

Xavier Dupuy
Chairman

CONTENTS

	Page
WARNINGS	3
The BROCHE FLAMBERGE	7
DESCRIPTION	7
1. General Description	7
2. Electrical Power and Gas Input ratings	8
3. Power of the electric elements	8
4. Dimensions	8
BEFORE DELIVERY	10
1. Safety	10
1.1. Ventilation	10
1.2. Installation	11
1.3. Sample installations	12
2. Electrical supply	13
3. Gas supply	13
CONNECTIONS	13
1. Electrical connections	13
2. Gas connections	14
IGNITION – ADJUSTMENTS	15
1. Tests	15
2. Adjustment	16
2.1. Adjusting the Low Flame	16
3. Injector replacement	17
FUNCTIONING	19
1. Igniting the Broche Flamberge gas	19
2. Adjusting rod holders	19
3. Positioning rods	20
4. Operation on the rods	20
5. Using the various rods	20
6. Cooking	21
7. Cleaning	22
8. Important	23
COMPLIANCE WITH EUROPEAN DIRECTIVES	24
WARRANTY	25

WARNINGS

This appliance must be installed by a qualified professional in accordance with the regulations in force in the country where the appliance is installed and must only be used in a well ventilated area. Read the manuals before installing and using this appliance.

Appliance class:
Class 3: Appliance to be flush fitted

For the Broche Flamberge to fit with enamel or stainless steel surround (option only):
- Class 1: Independent cooking appliance with normally no direct contact with neighboring walls or items of furniture.
- Class 2: Cooking appliance to be fitted between two items of furniture, whose walls can be in direct contact with the neighboring items of furniture. During installation, this appliance may be in contact against only a single item of furniture.

Before installing the appliance, ensure that the local gas supply conditions (gas type and pressure) and the adjustment of the appliance are compatible.

The adjustment conditions for this appliance are indicated on the label at the back of the hob and on the test certificate.

This appliance is not intended to be connected to a ventilation system or a ventilation shaft for combustion products. It must be installed and connected in accordance with current regulations. Particular care shall be taken concerning ventilation arrangements.

The use of a gas cooking appliance results in the production of heat and moisture in the room where it is installed. Ensure that this room is well ventilated: keep the natural ventilation apertures open or install a mechanical ventilation appliance.

Prolonged or intensive use of the appliance may call for additional ventilation, e.g. by opening a window, or for more effective ventilation, by increasing the power of the mechanical ventilation system, if there is one.

This appliance can be installed in an alcove made of non-combustible (e.g.: a brick alcove) or combustible material (e.g.: wood furniture). However, we strongly recommend installation in a non-combustible alcove because, following extensive usage, wood could change color or be damaged through drying.

The accessible parts are hot when in use: ensure that all combustible materials are at least 1.50m away from the appliance (in front, above and at the sides). It is forbidden to place the appliance under a hood made of wood or other combustible material.

WARNINGS

The parts that are protected by the manufacturer must not be manipulated by the installer or the user.

WARNING
The accessible parts are hot when in use: keep young children at a safe distance.

If you smell gas:

- Do not turn change the position of any electrical switches (if on, leave on; if off, leave off).
- Do not smoke.
- Do not use naked flames.
- Turn off the gas, at the meter or at the gas bottle.
- Open all doors and windows to release the gas.
- Call your gas supplier.

The rotisserie should be regularly maintained by a professional technician, who should only use approved spares. Ask the installer to show you where the rotisserie circuit breaker is located. Note this location for reference purposes.
Always let that the rotisserie cool down, and plug it out before proceeding to cleaning or maintenance operations, unless otherwise specified in these instructions are in the “User's Guide”.

All parts of the rotisserie become hot when in use, and remain hot even after the cooking. To avoid the risks of burning, always make sure that the controls are on STOP, and that the rotisserie has cooled down before proceeding to clean it.

Exercise caution when cleaning. If you use a sponge or humid cloth to wipe marks from a hot surface, be careful to avoid getting burned by the vapor. Moreover, bear in mind that some cleaning products can generate dangerous vapors on contact with a hot surface.

Never use aerosols in the proximity of the rotisserie when the rotisserie is in operation. Moreover, never store combustible products, petrol, or any other flammable gases or liquids near the rotisserie.

The items to be roasted should be as dry as possible. Any ice or ice crystals on a deep frozen food or humidity on fresh food can lead to spattering.

Make sure no water manages to enter the appliance.

NEVER USE the rotisserie to heat a kitchen; not only is this a waste of energy. It can also cause the control buttons to overheat.

WARNINGS

Completely unwrap the rotisserie before starting it up. Remove all plastic and carton packaging materials after unwrapping the rotisserie.

Never let children play with packaging materials.

Never leave objects on the cooking surface of the rotisserie: the presence of hot air could set flammable products alight, or it could increase the pressure inside closed containers causing them to explode.

Several types of plastic are combustible, and most of them can be damaged by heat. Remove any objects made from paper, plastic or fabrics (such as cooking books, plastic cooking utensils, towels, etc.) as well as flammable liquids from any parts of the rotisserie liable to get hot.

Preferably, there should be no presses or shelving above the rotisserie. In the event of presses/shelving being above the rotisserie, make sure that they hold objects seldom used, which can be safely kept in a place exposed to the heat generated by the rotisserie.

Never cover the slits, apertures or holes in the bottom part of the rotisserie, and never cover the grills with products such as aluminum foil; doing so would prevent air circulation inside the rotisserie and the aluminum foil could cause heat to build up leading to a risk of fire.

Never touch the burner or the surfaces around the burner. Note also that the burner can remain hot for a certain time even after it has been turned off. Surfaces located around the gas burner can become sufficiently hot to cause burns.

Likewise, make sure that there is no contact between clothing and other flammable products and heating elements or rotisserie internal surfaces.
Wear appropriate clothing.
Do not use loose-fitting clothing (sleeves, etc.) when operating the rotisserie.

If there are shells/presses above the rotisserie, be careful when reaching for products they might contain.
Flammable products can ignite on contact with a burner flame or a warm surface, leading to serious burns.

Use only oven gloves or kitchen gloves that are dry.
Using oven gloves or kitchen gloves on warm surfaces can lead to burns caused by the vapor. Avoid all contact between oven gloves and warm heating elements.
Never use a towel, thick cloth or similar instead of an insulating glove; they may catch fire on contact with a hot surface.

Never operate the rotisserie using wet hands.

WARNINGS

Make sure that your rotisserie has been correctly installed and grounded by a qualified technician.
All our cooking appliances are intended for domestic use only; i.e., not professional. In the event of non-domestic use, the manufacturer shall not incur any liability, and the warranty shall be considered void.

TRANSPORT PRECAUTIONS
Never transport the rotisserie with the front downwards and horizontal; rather, it should always be transported with its back downwards.

ATTENTION ACHTUNG ATTENZIONE

Installing the rotisserie in Switzerland

The following directives are to be observed during assembly and installation:

- Gas directive of the SSIGE G1 (2005).
- Directives CFST N° 1942: Liquefied gas, part 2
(CFST: Federal Inspection Committee for Work Safety Coordination)
- AEAI recommendations (Association of fire insurance establishments).

Schweizerische Vorschriften

Bei der Aufstellung und Installation sind folgende Vorschriften zu beachten:
- SVGW-Gasleitsätze G1 (2005)
- EKAS-Richtlinie Nr. 1942: Flüssiggas, Teil 2
(EKAS: Eidgenössische Koordinationskommission für Arbeitssicherheit)
- Vorschriften der Vereinigung Kantonaler Feuerversicherungen (VKF)

Instalazione in Svizzera

Si deve consideare nel processo di montaggio e installazione le seguente prescrizione:
- Direttive gas della SSIGA G1 (2005)
- guida CFSL N° 1942: Gas liquefatti, parte 2
(CFSL: Commissione Federale di coordinamento per la Sicurezza sul Lavoro)
- direttive dell' Associazione degli Istituti Cantonali di Assicurazione Anticendio (AICAA)

"La Broche Flamberge"

"ON DEVIENT CUISINIER, MAIS ON NAIT ROTISSEUR"

"COOKING CAN BE LEARNED, BUT ROTISSERIE COOKING IS AN INNATE SKILL"

This dictum, scrupulously believed by the Chaîne de Rôtisseurs (guild of rotisserie cooks), demonstrates all the difficulties and subtleties of cooking on a spit.

Certain absolute principles of this type of ancestral cooking mode must be respected in order to achieve outstanding results.

Description

1. GENERAL

The "Broche Flamberge" is a rotisserie from the "Château" line, designed for combustible or non-combustible (preferred version) built-in installation.

It consists mainly of a heating source (gas burner or electric element) and an electrical motor for the rotisserie. It is delivered with the following accessories: 1 English-style rod, 2 flat rods, 1 sauce spoon.

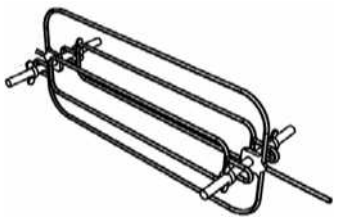

English-style rod

flat rod

The "Broche Flamberge" is available only as a gas model:
— ref. BFG - - 00ECT: for use with either natural or butane / propane gas at the standardised supply pressures of European countries:

For adapting the "Broche Flamberge" spit to the various gases, see pages 16 to 18.

2. ELECTRICAL POWER AND GAS INPUT RATINGS

The following table outlines, for each type of gas, the nominal and low heat flow (electrical power in kW - maximum heating power) as well as the volume flow rate in m^3/hour for natural gas or the mass flow rate in kg/hour for propane and butane.

NOMINAL FLOW RATE

Burner	**Nominal heat flow**	**Nominal flow rate m^3/hour**		**Mass flow rate kg/hour**
	kW PCS	**Natural gas G20 20 mbar**	**Natural gas G25 20/25 mbar**	**Butane / Propane G30 / G31 29 / 37 / 50 mbar**
BFG model	**9.000**	**0.857**	**0.996**	**0.654**

LOW FLOW RATE

Burner	**Low heat flow**	**Low flow rate m^3/hour**		**Mass flow rate kg/hour**
	kW PCS	**Natural gas G20 20 mbar**	**Natural gas G25 20/25 mbar**	**Butane / Propane G30 / G31 29 / 37 / 50 mbar**
BFG model	**4.000**	**0.380**	**0.442**	**0.290**

3. POWER OF THE ELECTRIC ELEMENTS

BFG--00ECT Broche Flamberge gas model (engine) ..... 15.5 W

4. DIMENSIONS

Broche Flamberge

— Height : 725 mm
— Width : 755 mm
— Depth : 380 mm
— Weight : 60 kg

Frame

— Height : 792 mm
— Width : 815 mm

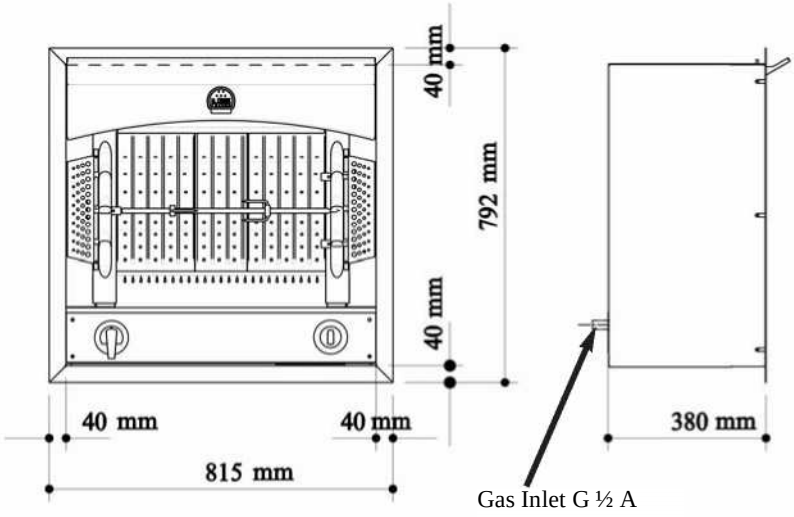

Rear view

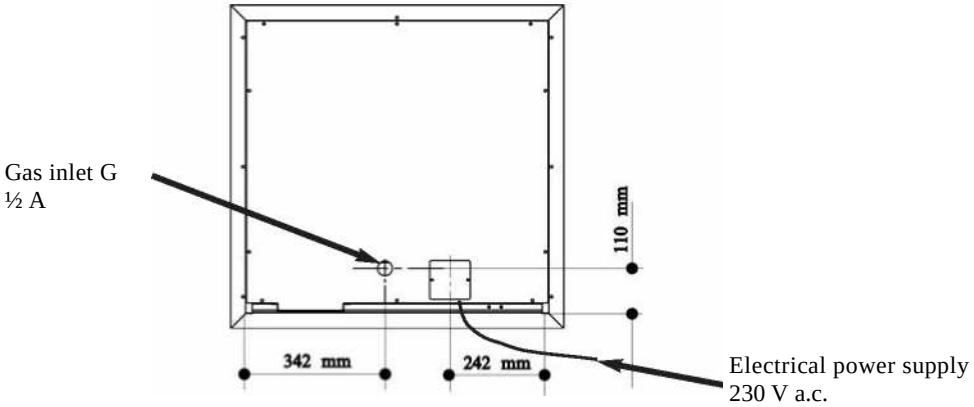

Built-in opening

— Height : 730 mm minimum - 760 mm maximum

— Width : 760 mm minimum - 800 mm maximum

— Depth: : 480 mm minimum

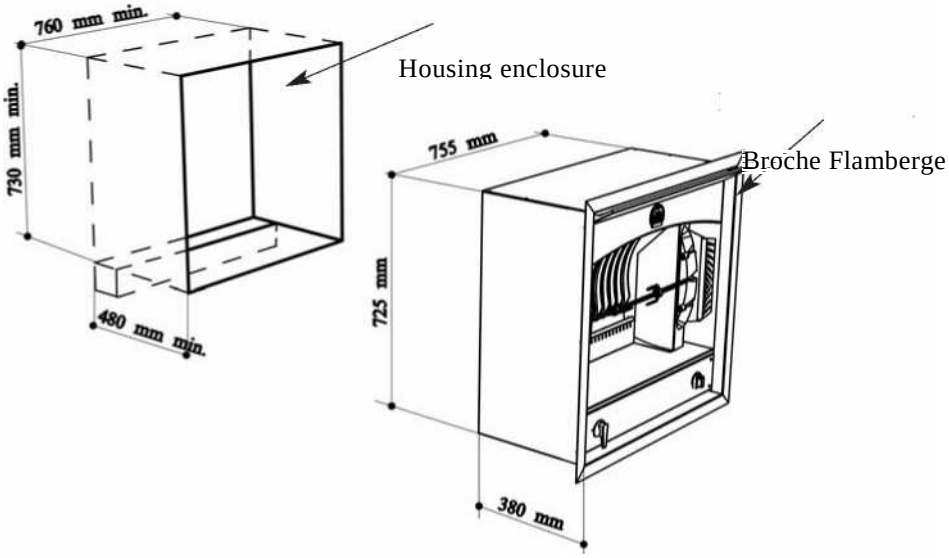

BEFORE DELIVERY

In order to be able to install your appliance as soon as it is delivered, you must check that the layout of your kitchen and your gas and electricity supplies are adapted.

All gas and electrical installations must comply with the standards and regulations in force in the country where the appliance is installed, as well as with the requirements of local gas and electricity suppliers.

In the event of the rotisserie being installed by us, our technicians may ask you for a certificate proving that your domestic installation is compliant.

The manufacturer shall not incur any liability for an incorrect installation, and incorrect installations shall void the warranty. Moreover, no legal actions can be undertaken in relation to incorrect installations.

1. SAFETY

1.1. Ventilation

Special care should be taken to respect the regulation in force regarding ventilation. All requirements and regulations in force regarding the ventilation of rooms where gas appliances are installed, should be respected.

The “Broche Flamberge” spit is not intended to be connected to a ventilation shaft or ventilation system for combustion products leading to the outside. It is therefore vital that the room where the spit is to be installed has **excellent ventilation, i.e. to the outside** - for hot air, vapor and burnt gases – and **a fresh air inlet**.

Any room where a gas appliance is installed must have general, continuous ventilation, subject to the ventilation rates being compatible with the fresh air flow rates required for correct operation of the appliances.

You should take into account all appliances using gas installed in the room; additional ventilation may be necessary.

Do not use an air recycling system
A flow rate of at least 4 cubic meters per hour of fresh air per KW of gas heat power is necessary to guarantee an adequate combustion air supply.

The external evacuation system must consist of fixed aerators, flipping glass panes, **vapor extractors or extractor hoods**. We advise you to adopt one of the latter two solutions.

Recommended power for a hood: 500 m3/h minimum or 10 to 15 times the volume of air in the room per hour.

"Cornue" can supply models of customized hoods in materials matching your cooker or flush-fitting extractors that can be integrated into a hood manufactured by the user.

Fresh air inlet: to be efficient, this must be located either directly at the back and/or front of the alcove and in a radius of 2 to 3 meters at ground level.

1.2. Fitting the spit

The "Broche Flamberge" spit is intended for installation in an alcove made of bricks, tiles or other **non-combustible material**. This alcove must have the following dimensions:

Height : 730 - 760 mm
Width : 760 - 800 mm
Depth : 480 mm minimum

A frame fits over the edge of the alcove.

We recommend that the "Broche Flamberge" spit be attached to the frame on the front by 4 screws. The position of these screws is established by the installer according to the appearance or the arrangement of the wall covering.

The accessible parts are hot when in use: ensure that all combustible material is at least 1.5 maters away from the appliance (in front, above and at the sides).

It is not recommended to place the spit under a hood made of wood or other combustible material.

The appliance must be well ventilated, with several fresh air inlets, and hot air outlets on the front and rear of the appliance.

Leave a minimum of 100 mm between the wall and the rear of the Flamberge to make it easier to connect the gas and electricity connections.

As an option, the "Broche Flamberge" spit can be supplied in a "ready to use" version with an enameled or stainless steel surround. Ventilation requirements for this version are identical to the fitted version.

1.3 Sample correct installations of the "Broche Flamberge" spit

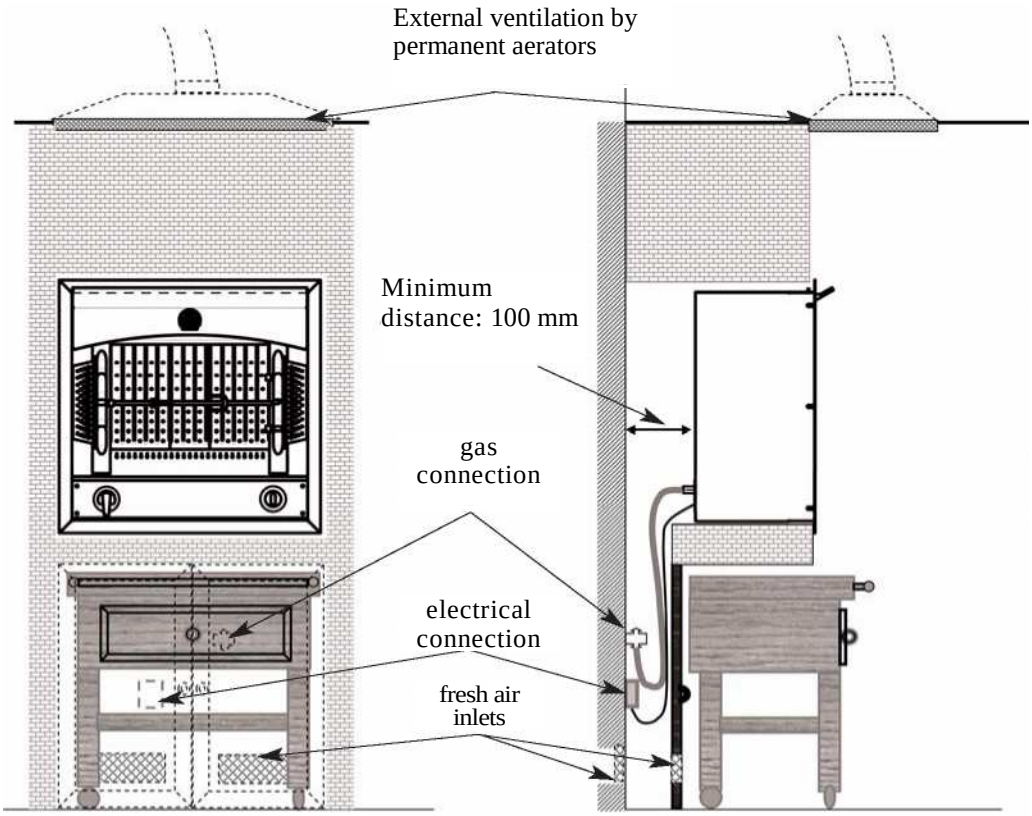

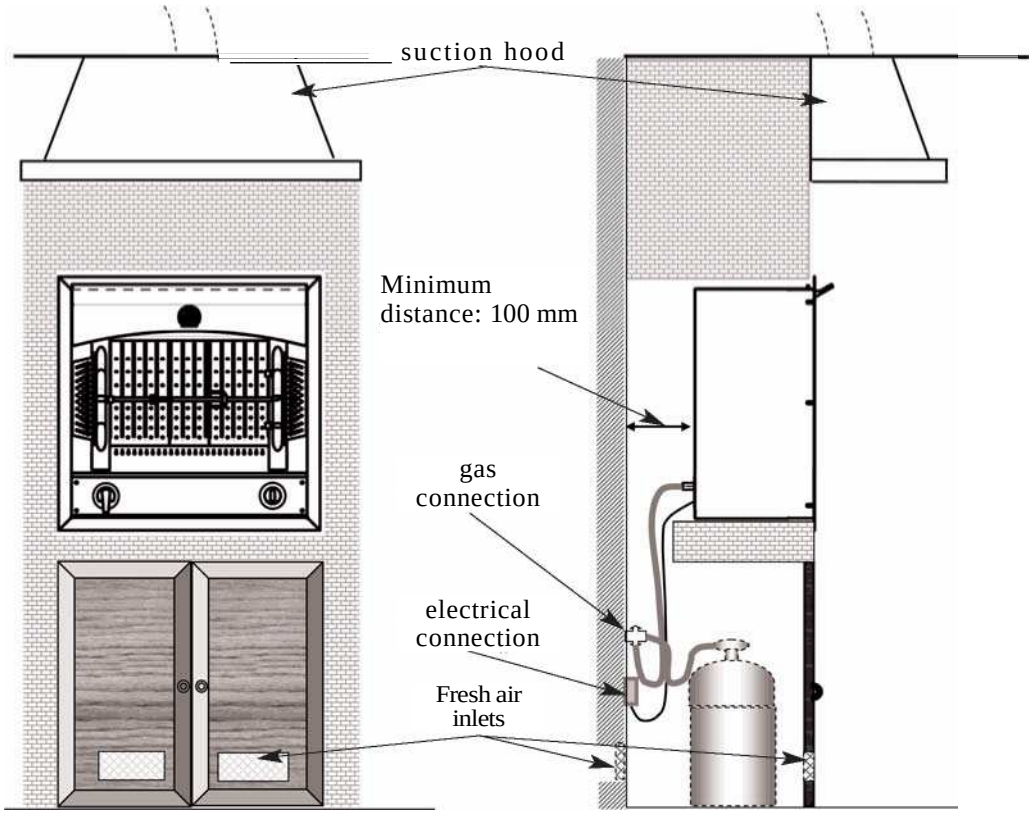

2. ELECTRICAL SUPPLY

Voltage: 230 volts in single-phase, for the BFG- -00ECT model

Safety: the electrical supply must be grounded and must be equipped with a **protective circuit breaker** compatible with the appliance's power rating. In high-risk regions, an additional protection against natural electrical phenomena (lightning) must be used.

The electrical connection will be made using a **flexible cable** directly connected to the circuit breaker outlet via a junction box. Space must be left for a **continuity box, with terminal bar** - preferably of the anti-shearing type – located on the right behind the "Broche Flamberge" spit.

3. GAS SUPPLY

The gas (natural, butane or propane) must be supplied via a rigid metallic pipe, terminated by an **easily accessible manual shut-off valve**, installed on the supply side of the connection, in the immediate vicinity of the appliance.

This valve must be installed bearing in mind that the gas inlet is located on the rear left-hand side of the appliance, in the center.

When all of the work has been carried out on your gas supply network, **perform a functional test before connecting** the "Broche Flamberge" spit. This will ensure that no metallic burrs can enter the appliance's gas supply pipe and thus obstruct the burners. Also, perform mechanical resistance unsealing tests in accordance with the applicable standards.

CONNECTIONS

1. ELECTRICAL CONNECTION

This paragraph does not concern the BFG--00ECT gas-only model, for which there are no particular electrical connection requirements, the only connections being those of the 15.5 W motor.

The "Broche Flamberge" spit is delivered ready equipped with a flexible cable consisting of 3 conductors (230 V, single-phase), about 1.50 m in length, ready for connection to a single-phase supply.

All electricity supply circuits must be disconnected before accessing the connection terminal boxes.

Insert the cable below the hot air outlets at the back of the "Broche Flamberge" spit, never in front of them.

2. GAS CONNECTION

Your “Broche Flamberge” spit is delivered with equipment adapted to the type of gas supply specified when ordering (natural gas, butane or propane), and according to the country where the spit is to be installed. In most cases, only the injector needs to be changed if a different type of gas is used. However, it may be necessary to adjust the “by-pass” screw. See page 17 for the table summarizing the injectors to be used for each type of gas, the country of installation and injector replacement instructions

If no particular instructions are specified in the order, the appliance is equipped with injectors for natural gas G20 (pressure: 20 mbar).

The type of gas for which the appliance is equipped is indicated on a label at the rear of the appliance, near the gas supply pipe.

The gas connection must be done in keeping with the installation rules in force in the country where the appliance is to be used.

Connection to the previously installed shut-off valve must be made using a flexible hose with screwable approved connectors.
The characteristics of this hose must be tailored to the nature and distribution mode of the gas used, as well as to the diameter of the connection used.
The hose must not pass behind, in front of or close to a hot air outlet. It must be put down so as not to be reachable by flames. It must not be crushed or kinked, and must be put down so as to avoid all pulling stress.
The hose must be firmly attached at both ends, and it must be possible to inspect the complete hose length. Moreover, the hose should be replaced by the user whenever required and, in all cases, before the maximum use date given on the hose.

Recommended use: metallic flexible hose (stainless steel surrounded by metallic braids) with visible connectors, without any lifetime end date.

Regardless of the gas used, it is forbidden to connect our gas appliances with flexible hoses mounted on rubber tail pieces.

The Broche Flamberge is delivered with a threaded coupling. The cylindrical external threading has a gas pitch of “G ½ A”, in keeping with the EN ISO 228-1:2003. This type of connection is used in France and some European countries.

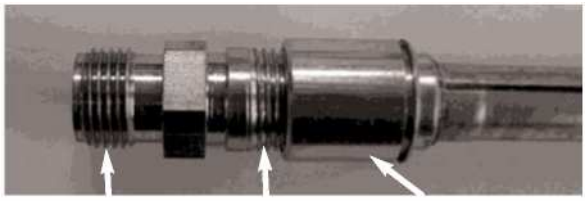

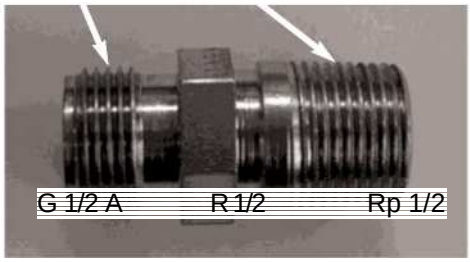

If you use an “R ½” external conic coupling as per the EN 10226-1:2004 and EN 10226-2:2005 standard or an “Rp ½” internal cylindrical coupling as per the EN 10226-1:2004 standard, then unscrew the adapter on the appliance and either turn it around, or connect your hose directly to the end of the tubing.

Screw the gas hose at the end of the rotisserie tubing, tightening it only by hand. Place two appropriate tools (one on the tubing to keep it from moving, and the other on the hose coupling) and tighten the coupling on the hose.

Assemble the hose so that the hose is left hanging in a “U” form.

When the connection is terminated, perform a pressure test to check the sealing of the rotisserie. When checking the sealing, make sure not to use washing-up liquid, which could damage the appliance; instead, use a foam liquid specially intended to detect leaks.

Sealing must be ensured by tightening 2 sealing surfaces beyond the threading with an appropriate sealing joint between them. To ensure the correct level of sealing along the threading, a sealing compound or joining compound should be applied to the threading.

If a sealing compound has to be used, we recommend LOCTITE 542.

For appliances operating with BUTANE / PROPANE gas, use two cylinders with an automatic reversing switch or an outdoor tank, and a standard regulator adapted to the total flow rate for your model and the gas pressure.
We advise you to use a 2 kg/h minimum regulator.
As a general rule, an additional safety margin corresponding to 20 – 30% of the appliance’s maximum flow rate must be respected.
To guarantee constant pressure from the gas supply, the regulator should not be placed more than 2 m from the appliance.
Each appliance must have its own regulator.

IGNITION – ADJUSTMENTS

1. TESTS

The “Broche Flamberge” gas spit is fitted with an automatic burner turn-on and with a shut-off tap with thermocouple: if the burner should accidentally go out, the gas supply is automatically shut off after a few seconds.

The thermocouple should not be activated for more than 15 seconds; if, after this time, the burner has not ignited, you should stop attempting to ignite, and wait at least one minute before attempting to reignite the burner.

To ignite the spit, proceed as follows:

- Push in the control lever and turn it to the left to the “high flame” position. The burner turns on automatically.
- Keep the control lever pressed in for between 5 to 10 seconds (on first igniting the spit, the safety thermocouple may take longer to react, without however exceeding 15 seconds). A “tick-tick” noise means that the spit ignited correctly.
- To turn down the flame (“low flame”), turn the level to the left as much as possible or put it head downwards.
- To switch off the flame, turn the lever to the vertical position turning it to the right.

In the case of accidentally turning off the burner flame, close the burner control level and do not turn on the burner for at least one minute.

When the rotisserie is used for first time, there may be a slight smell of “newness”; this will rapidly disappear with time.

2. ADJUSTMENTS

All adjustments are made before leaving the factory to ensure an optimal setting. However, after changing an injector for use with a different type of gas supply, the “low” flame setting should be adjusted.

All settings and injector replacements should be carried out by a qualified professional.

After any intervention on the gas circuit (adjustments, injector replacements, etc) the system should be checked for gas sealing tightness, according to current standards.

2.1. Adjusting the “low” flame setting

Only the burner “low flame” setting can be modified by the following procedure:

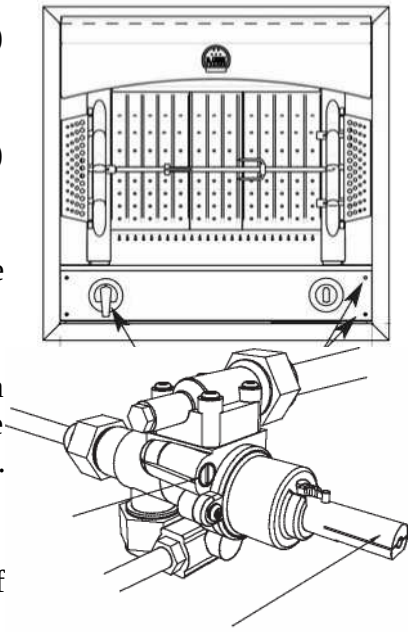

1. Remove the control lever by unscrewing the screw(a) which holds it in place.

2. Remove the lower plate by unscrewing the screws (b) blocking it.

3. Re-install the control lever; light the burner and turn the lever to the “low flame” position.

4. Remove the control lever again and using a screwdriver, turn the slotted screw (A) located on the body of the tap (B) to the **left to increase** the gas flow or to the **right to reduce** it. Re-install the lever to switch off the burner.

Comment: the flame height must not be more than a third of the height of the hearth.

5. Re-install the lower plate and the control lever, tightening the appropriate screws

Warning: Make sure that there is enough room between the lever and the lower plate to allow the lever to be pressed down before turning when lighting the burner.

3. INJECTOR REPLACEMENT

All by-pass screw and injector replacements and adjustments should be carried out by a qualified professional.

The burner injector reference differs according to the type of gas and country of installation.
The following table indicates which injectors should be used following a change in the gas supply or a house move.

GAS			COUNTRY	Injector		Primary air adjustment(mm)	BY-PASS SCREW	
	Categories index	Pressure of reference gas		Diameter (mm)	Marking		Marking	Adjustment
NATURAL	2E+	G20/G25 20/25 mbar	BE, FR	2,3	230	3	96	Adjustment
	2H	G20 20 mbar	AT, CH, CY, CZ, DK, EE, ES, FI, GB, GR, HR, IE, IT, LT, LV, NO, PT, RO, SE, SI, SK, TR					
	2E	G20 20 mbar	DE, LU, PL					
	2L	G25 25 mbar	NL	2.4	240	2	96	Adjustment
	2LL	G25 20 mbar	DE	2.6	260	2	96	Adjustment
BUTANE – PROPANE	3+, 3B/P, 3B, 3P	G30/G31 28-30/37 mbar	BE, CH, CY, CZ, DK, EE, ES, FI, FR, GB, GR, HR, HU, IE, IT, LT, LU, LV, NL, NO, PL, PT, RO, SE, SI, SK, TR	1.5	150	6	96	Screw completely in
	3B/P, 3B, 3P	G30/G31 50 mbar	AT, CH, DE, LU, SK	1.25	125	2	80	Screw completely in

Country:

AT: Austria
BE: Belgium
CH: Switzerland
CY: Cyprus
CZ: Czech Republic
DE: Germany
DK: Denmark
EE: Estonia
ES: Spain
FI: Finland
FR: France
GB: United Kingdom
GR: Greece
HR: Croatia
HU: Hungary
IE: Ireland
IT: Italy
LT: Lithuania
LU: Luxemburg
LV: Latvia
NL: Netherlands
NO: Norway
PL: Poland
PT: Portugal
RO: Romania
SE: Sweden
SI: Slovenia
SK: Slovakia
TR: Turkey

The injectors are always replaced in the following sequence:

1. To access the injector, remove the rear cover from the “Broche Flamberge” spit by unscrewing the retaining screws.

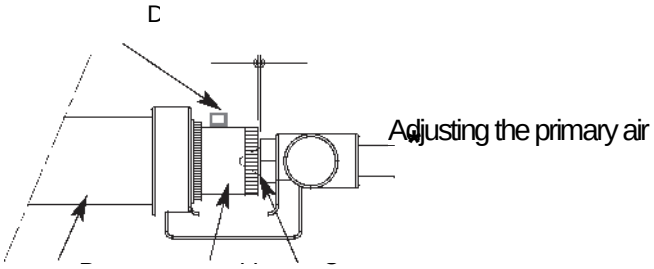

2. Screw the adjusting cone (A) and insert it into the mixing tube (=hose) (B) in order to free sufficient space to unscrew the injector.
3. Unscrew the injector (C) using a N° 7 eye or spanner.
4. Insert the injector corresponding to the new gas supply and screw it in.
5. Ignite the burner and adjust the air inlet by screwing or unscrewing the adjusting cone (A) as described in the table on page 16 until you obtain a slightly blue flame showing no separation: separation of the flame indicates that there is too much air.
6. Then block the adjusting cone with the lockwasher (D).

The injector is easier to access and adjustments are easier to make if the rod holders are at the maximum “Out” position.

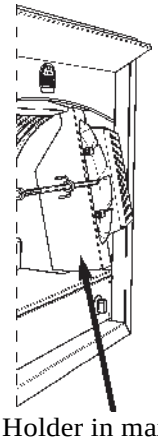

Holder in maximum “out” position

If the appliance is changed to be used with a new type of gas and/or a new pressure, then a new label should be applied, detailing the new settings, as well as the new type of gas to be used with the new injectors.

Any seals should be replaced.

IGNITION AND USE

1. IGNITION – BROCHE FLAMBERGE GAS

To ignite the spit, proceed as follows:

- Push in the control lever and turn it to the left to the “high flame” position. The burner turns on automatically.
- Keep the control lever pressed in for between 5 to 10 seconds (on first igniting the spit, the safety thermocouple may take longer to react, without however exceeding 15 seconds). A “tick-tick” noise means that the spit ignited correctly.
- To turn down the flame (“low flame”), turn the level to the left as much as possible or put it head downwards.
- To switch off the flame, turn the lever to the vertical position turning it to the right.

In the case of accidentally turning off the burner flame, close the burner control level and do not turn on the burner for at least one minute.

2. ADJUSTING THE ROD HOLDERS

You can adjust the position of the rods with respect to the heating hearth: simply pull the holders outwards to move them away from the hearth (in general, this position is used to prepare large roasts) and simply push them inwards to move closer to the hearth.

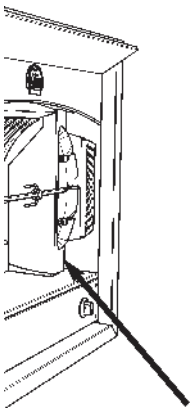

Rod holder position 1

Rod holder position 2

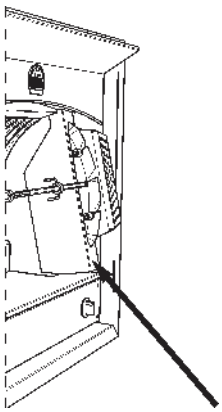

Rod holder position 3t

NB: the rod holders get hot when the rotisserie is in operation; therefore, always use dry kitchen gloves or oven gloves.

3. POSITIONING THE RODS

For the **horizontal rods (English or flat)**, engage the rod of the square side corresponding to the desired height into the slot, and rest the tip of the rod on the matching support. It is recommended to center the roasts on the rod.

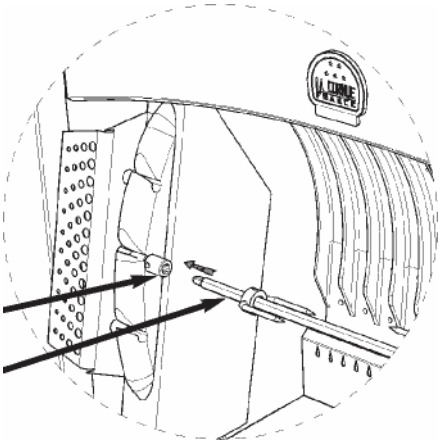

4. OPERATION OF THE RODS

Turn the switch on the right-hand side of the rotisserie to position “1” to start driving the motor.

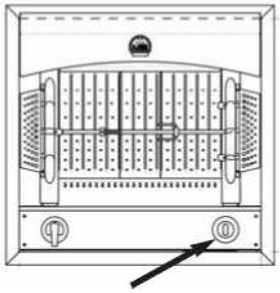

5. USING THE RODS

All types of meat that can be put on a spit, such as chicken, turkey, duck, hare, etc... should be supported by flat rods. Secure the meat with the forks supplied to that end.
For red meat, or sides that are difficult to balance on the rod, use the English-style rod.

flat rods

English-style rod

6. COOKING – HINTS FROM THE CORNUE CHEF

White meat, such as poultry, veal, pork, can be placed in the rotisserie without preheating it.

For red meat, such as joints of beef or lamb, **it is recommended to preheat the rotisserie** for about 15 - 20 minutes, before placing the roast. This will ensure that the outside of the meat will be properly cooked

Leave the rotisserie on the "HIGH" position for 10 minutes, then reduce the temperature by placing the knob on the "LOW" position.

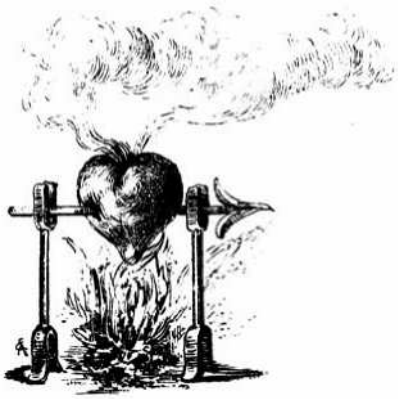

To roast a chicken, for example, place it on the spit in the middle disc. Check the distance of your rod holders: a free range chicken, which takes longer to roast, should be positioned further from the source of heat. The average roasting time of a chicken is 45 to 60 minutes. The same principle applies for ducks, pigeons and so on.

If you want to roast a pair of ducks or cockerels, you then use the 2 rods, and put them on the top and bottom disks. Make sure that the blades are correctly screwed, and that the two rods are not rubbing up against each other during rotation.

You can also put two items of poultry on the same flat rod on condition that the necks be in the center of the rod; i.e., the feet facing outwards, to the left and to the right.

For larger roasts, such as rib of beef, complete fishes or similar, position them between the central claws. Naturally, you can add herbs, slices of lemon, or any other seasoning you wish. About 20 minutes is enough to prepare a rib of beef or a nicely sized bream. Increase the heat for the roasting you want (rare, blue, etc.).

If you want to color-mark a piece of meat, or prepare small roasts (fowl, duck breast, etc.), set the rotisserie to high flame, and then turn it down.

You can make the skin of a piece of meat more crackly, simply by pouring a little juice over the meat when half roasted, and repeating until done. Use either a spoon or a brush to apply a thin coating of fat on the roast. Make sure not to apply too much fat (after all, you are roasting, not deep-fat frying!); in fact, the fat holds the seasoning or herbs in place on the roasts. During the roasting, you can also use the sauce spoon to add small spleens, sweet peppers, tomatoes, onions and similar. Whatever takes your fancy!

To roast fish (sea bass, bream, monkfish, etc.), simply put them onto the English-style rod. Make sure they are firmly in position (i.e., will not fall off during the roasting). The same precaution should be taken when roasting with the flat rod: use the forks to hold the roasts in place, and to make sure they do not fall or move during the rotation.

Don't forget that you can also use your Flamberge with pineapples, pears, or even cakes (for example, crepe pastry on a genoese while the rod rotates).

7. CLEANING

Oil regularly the whole gears (gearwheels, chains, ...) as well as the rods (every 3 months approximately).

Cleaning external parts not exposed to grease spills and splashes is simple. Moreover, the "only" purpose of such cleaning is to keep your Broche Flamberge looking good. The frequency of the cleaning will depend on how often you use the appliance and the ambient weather conditions. Note that if your Broche Flamberge is in a secondary residence, it is essential that you clean it before returning home, especially if the secondary residence is located near the sea.

This is because, if you do not clean the appliance, then the combined effects of the ambient humidity, the salty air and acidic grease spills and splashes will attack the metals even though the parts are made from stainless steel or solid brass.

In other words, we strongly recommend that you regularly and thoroughly clean your rotisserie before returning home.

The cleaning will depend on the exterior surfaces and the finishing materials.

Enamel front in bright colors

Since the enamel is glazed, you can use a window cleaning product, with paper towels.

If the rotisserie is overheated, the surround can turn yellow due to grease spills and splashes. In this case, use scouring cream and a sponge. You can use a window cleaning product for a perfect finish.

Stainless steel front

For everyday maintenance, use turpentine or household alcohol and paper towels.
Every 3 to 6 months, thoroughly clean the rotisserie to remove any resistant grease being retained by the brushed steel. We recommend using a scouring powder or sugar soap (olive oil soap in gel format), well diluted in hot water, to remove all grease. Use clean water to rinse off on completion.
Turpentine will remove any traces of water or detergent.

Enamel front in matt colors (black, gray)

NB: matt colors make for a fragile finishing.

The matt color is a non-glazed finishing; that is to say, it is not protected. In other words, using excessively active cleaning products might leave permanent marks.
On the other hand, if we have been using this finishing for years in spite of the above precaution, it is quite simply because cleaning is very simple. Simply follow our advice:

Clean the appliance with lukewarm water and olive oil soap using a nonabrasive sponge (or even better, sugar soap (olive oil soap in gel form). Then rinse using pure water and completely dry the appliance using paper towels or a cloth.

Finishings

Nickel or Chrome finishings

These finishings do not require any particular cleaning: simply use a product intended for cleaning windows with paper towels or a cloth to remove finger traces.

Copper or Brass Finishing

Use a special copper and brass cleaning product, in soap or liquid form, on a soft cloth. Remove all marks using a humid sponge. By removing product deposits, using water, you double the lifetime of the glossy finishing.
We recommend using either “Copper Cleaner” (manufactured by “Spring”) or “Bistrot Cuivre” (manufactured by “Matfer”).

Avoid using anti-oxidation products which leave a lot of lack deposits on the appliance, making it necessary to repeat the same operation several times.

8. IMPORTANT

Once the rotisserie has been started, it is recommended not to touch the bunches of ceramic fibers, as this may damage them. Pay attention not to touch the gears during functioning.

COMPLIANCE WITH EUROPEAN DIRECTIVES

All of our appliances comply with the following European Directives:
- Directive 90/396/EEC “GAS APPLIANCES” (EU standard EN30)
- Directive 2006/95/EC “LOW VOLTAGE”
- Directive 89/336/EEC “ELECTROMAGNETIC COMPATIBILITY”
- Directive 2002/96/EEC “WEEE - WASTE FROM ELECTRICAL AND ELECTRONIC EQUIPMENT”
- Directive 2002/95/EEC “RoHS - RESTRICTIONS ON HAZARDOUS SUBSTANCES”

WASTE FROM ELECTRICAL AND ELECTRONIC EQUIPMENT

The European Parliament’s 2002/96/EC Directive on waste from electrical and electronic equipment (WEEE) requires that used household appliances are not disposed of in unsorted municipal landfills and must be collected separately to optimize recovery and recycling of the materials they contain and thus reduce their impact on human health and the environment. Consumers should contact their local authorities or their dealer with regard to the procedure to be followed for the collection of their old appliance. Please comply with local regulations for disposal of the packaging material. The packaging can thus be recycled.

This “crossed-out bin” logo found on all products means that the equipment cannot be disposed of with other waste, that it is the object of a selective collection with a view to recovery, reuse or recycling.

3-YEAR WARRANTY

Following **receipt of full payment** for our goods, our appliances are guaranteed three years from the invoice date against any structural faults and any material defects. The warranty excludes improper use of the appliance or a non-compliant installation. Intervention and travel costs will be billed in this event.

If our goods were to dysfunction, the buyer then has to contact us once he has ensured that it is not due to a non-compliant installation or abnormal use in order to decide with us how the appliance should be repaired. **The appliance should be cleaned and clean prior to any intervention**.

Any complaints with regard to the condition, presentation or compliance of our goods should be addressed to our headquarters by recommended letter with acknowledgement of receipt within a maximum of eight days following delivery.

The application of the warranty will be subject to LA CORNUE SAS receiving a certificate stating that the material was installed by a professional in accordance with the current technical and safety standards.

Under this warranty, the seller shall replace at no cost the parts recognized as faulty by its technical department. This warranty covers all labor costs with the exception of travel expenses. The warranty period specified above shall not be extended if parts need to be replaced.

This warranty shall cease to apply:

- If the operational defect is the result of an unauthorized intervention on the appliance.

- If the faulty operation is due to normal wear and tear of the appliance or from negligence or insufficient maintenance by the buyer.

- If the faulty operation is due to force majeure.

LA CORNUE SAS shall not be held legally responsible in these three cases.

The seller's guarantee and his responsibility for products shall be limited to repairs to any defects as stipulated in the above conditions.

As expressly agreed between the contracting parties, the seller's responsibility in the event of an operational fault shall be limited to the above provisions, especially with regard to concealed defects as well as material and immaterial damage.

In all cases, the buyer may not suspend payment if he lodges a complaint about the quality of the goods.

The goods are always transported at the buyer's or his representative's own risks. It is therefore their responsibility to check them upon arrival and, if necessary, to lodge a complaint with the haulier. After having expressed specific established reservations on the delivery slip upon receipt, the buyer must confirm them by recommended letter to the haulier within two days of receipt (Article 105 of the Commercial Code).

We cannot in any event honor this warranty if these requirements are not met.

HEADOFFICE AND WORKSHOPS LA CORNUE
14, rue du Bois du Pont - Z.I. Les Béthunes
95310 SAINT OUEN L'AUMONE
Postal Address:
BP 99006 - 95070 Cergy Pontoise Cedex
FRANCE
Telephone: 33 (0)1 34 48 36 36
Fax: 33 (0)1 34 64 32 65
www.lacornue.com

1908 2008

After-Sales Department:
- Covered by the warranty:
tel: +33 (0)1.34.48.36.15 fax: +33 (0)1.34.48.52.31
- Not covered by the warranty (appliance older than three years):
tel: +33 (0)1.47.37.56.00 fax: +33 (0)1.47.39.10.49